Presence of Plecotus macrobullaris (Chiroptera: Vespertilionidae) in the Pyrenees

Authors: Garin, Inazio, García-Mudarra, Juan L., Aihartza, José R., Goiti, Urtzi, and Juste, Javier

Source: Acta Chiropterologica, 5(2) : 243-250

Published By: Museum and Institute of Zoology, Polish Academy of Sciences

URL: https://doi.org/10.3161/001.005.0207

The BioOne Digital Library (https://bioone.org/) provides worldwide distribution for more than 580 journals and eBooks from BioOne's community of over 150 nonprofit societies, research institutions, and university presses in the biological, ecological, and environmental sciences. The BioOne Digital Library encompasses the flagship aggregation BioOne Complete (https://bioone.org/subscribe), the BioOne Complete Archive (https://bioone.org/archive), and the BioOne eBooks program offerings ESA eBook Collection (https://bioone.org/esa-ebooks) and CSIRO Publishing BioSelect Collection (https://bioone.org/csiro-ebooks).

Downloaded From: https://staging.bioone.org/journals/Acta-Chiropterologica on 23 Mar 2025
Terms of Use: https://staging.bioone.org/terms-of-use

Acta Chiropterologica, 5(2): 243–250, 2003
PL ISSN 1508–1109 © Museum and Institute of Zoology PAS

Presence of *Plecotus macrobullaris* (Chiroptera: Vespertilionidae) in the Pyrenees

INAZIO GARIN[1], JUAN L. GARCÍA-MUDARRA[2], JOSÉ R. AIHARTZA[1], URTZI GOITI[1], and JAVIER JUSTE[2]

[1]*Zoologia eta Animali Zelulen Dinamika Saila*, *UPV*, *644 PK*, *E-48080 Bilbo*, *Basque Country*
E-mail: *zopgaati@lg.ehu.es*
[2]*Department of Evolutionary Biology*, *Estación Biológica de Doñana (CSIC)*, *Avenida María Luisa s/n*, *Pabellón del Perú*, *E-41013 Sevilla*, *Spain*

In July 2002, several bats of the genus *Plecotus* (Geoffroy, 1818) were captured at two localities of 'Ordesa y Monte Perdido' National Park (Central Pyrenees, Spain). They showed external characters that appeared intermediate between those of *P. auritus* and *P. austriacus*. Morphometric and genetic analysis have revealed that these long-eared bats should be ascribed to the recently recognized species *P. macrobullaris*. This study extends the distribution of this new species, whose western limit was considered, until now, to lie in the Alps, and adds a new mammal species to the Iberian fauna.

Key words: *Plecotus macrobullaris*, distribution, Pyrenees, mtDNA, morphology

INTRODUCTION

The understanding of evolutionary relationships, and taxonomic arrangement, of Palaearctic long-eared bats have remained entangled since the description of *Plecotus auritus* (Linnaeus, 1758). Different forms were proposed at specific and subspecific level during the 19th and 20th centuries (see Bree and Đulić, 1963, for revision), but they remained barely recognised (e.g., Miller, 1912 or Cabrera, 1914) due to the close morphologic similarities and lack of unambiguous discriminating characters between them. Consequently, only two sibling species were typically recognised in the taxonomy of the group (Bauer, 1960), *P. auritus* (Linnaeus, 1758) and *P. austriacus* (Fischer, 1829), both coexisting in continental Europe. New intermediate forms of long-eared bats have been reported and/or described in central Europe and the Balkans in the last few years (see review in Spitzenberger *et al*., 2001), although identification keys continue to be unreliable (Arlettaz *et al*., 1997).

Molecular tools, particularly mitochondrial DNA sequencing, are helping to clarify the situation. As a result of recent molecular approaches, the distinction of *P. auritus* and *P. austriacus* as two different lineages has been validated (Mayer and Helversen, 2001; Juste *et al*., In press) and three more species have been proposed for Europe: 1) *P. kolombatovici* Đulić, 1980, a sister species of *P. austriacus* found in lowlands from Croatia to the Adriatic coast of Anatolia; 2) *P. macrobullaris* Kuzjakin, 1965

Downloaded From: https://staging.bioone.org/journals/Acta-Chiropterologica on 23 Mar 2025
Terms of Use: https://staging.bioone.org/terms-of-use

(senior synonym of *P. alpinus* Kiefer and Veith, 2002 and *P. microdontus* Spitzenberger, 2002) — a highland sister species of *P. auritus* found from the Caucasus through Turkey and the Balkans to the Alps (Spitzenberger *et al*., 2003); and 3) *P. sardus* Mucedda, Kiefer, Pidinchedda et Veith, 2002 — a large bat also related to *P. auritus* and endemic to the island of Sardinia.

The fact that the distribution of several of the five species of long-eared bats overlap, coupled with the lack of discriminating external characters, means that field identification is still difficult. Nevertheless, particularly from a conservation perspective, delimitation of the distribution and ecological requirements for each of these long-eared bats is urgently required, as well as an assessment of the variability and/or usefulness of some proposed physical identification characters.

During an inventory of bat species present in 'Ordesa y Monte Perdido' National Park (Central Pyrenees, Spain), several *Plecotus* individuals were captured that could not be assigned to any of the known species for the Iberian Peninsula. Detailed comparative morphological and molecular analyses have allowed us to identify these intermediate specimens as *Plecotus macrobullaris*. These results confirm the presence of *P. macrobullaris* (= *P. alpinus*) in the Pyrenees, a species that was recently cited (Kiefer *et al*., 2003) from a locality in the middle of this mountains range (Andorra). Consequently, the known western distribution limit of this new species should now be considered to lie in the Pyrenees rather than in the Alps, and a new mammal is added to the Iberian fauna.

Materials and Methods

Bat sampling was conducted in July 2001 and 2002 at 56 different points throughout the 'Ordesa y Monte Perdido' protected area in the Pyrenees Mountains. Following National Park regulations, all captured specimens were released after being identified, sexed and measured. The altitudinal gradient in the area ranged from 650 to 3300 m, and bats were caught using mist nets at altitudes from 650 to 3080 m. Within the National Park, the landscape is dominated by natural mixed-forests (*Fagus sylvatica*, *Abies alba*, *Pinus sylvestris* and *P. uncinata*) below 1900 m. Pastures are dominant between 1900 and 2400 m and bareground predominates above 2400 m. Cliffs and rocky outcrops are common at all altitudes.

Field identification of long-eared bats was based on forearm length (FA); length of maxillary tooth row (CM^3); tragus width (TW) and thumb length excluding claw (ThL). Additionally, non-metric characters were inspected such as pigmentation of the tragus and overall dorsal and ventral colourations (Kowalski and Ruprecht, 1981; Schober and Grimmberger, 1989; De Paz and Benzal, 1990; Greenaway and Hutson, 1990).

For molecular analysis, wing membranes were punched following Worthington Wilmer and Barratt (1996) and samples preserved in ethanol 70%. DNA was extracted by phenol/chloroform procedure modified from Higuchi *et al*. (1998). A fragment about 700 bp of subunit 1 of the mitochondrial NADH dehydrogenase (ND1) gene was amplified using primers ER65 (Mayer and Helversen, 2001) and ER66 (Mayer and Helversen, 2001). The PCR cocktail (20 µl reaction volume) included 2 µl of DNA extract, 1 µl of each primer (10 µM), 0.8 µl of $MgCl_2$ (50 mM), 0.16 µl dNTP (25 mM), 0.5 unit of taq-polymerase with appropriate buffer and H_2O. Thermocycling consisted in 5' initial denaturation at 94°C, followed by 40 cycles at 94°C (30''), 63°C (30'') and 72°C (1'30''), with a final extension at 72°C (5'). The fragment was sequenced directly from purified PCR product using an ABI 3100 automated sequencer (Applied Biosystems, Warrington, UK) following manufacturer's protocols. To ease identification of the bats, we included in the analysis orthologous sequences from GenBank of *P. auritus* (AF401374) and *P. austriacus* (AF401367), both obtained by Mayer and Helversen (2001), and *P. macrobullaris* (= *P. alpinus*, AF516269) obtained by Kiefer *et al*. (2002). A sequence of *P. sardus* could not be used in the analysis since only 16S rDNA fragments of this species are deposited in GenBank.

Unambiguous alignments were constructed with Sequencher 4.1 and inspected by eye. Only different haplotypes were included in the analyses. The best fitting substitution model was selected using hierarchical likelihood ratio tests (LRT) implemented in Modeltest (Posada and Crandall, 1998). Genetic distances among haplotypes and main clades were then obtained using MEGA v. 2.1 (Kumar *et al*., 2001). To visualize phylogeographic relationships, a Neighbor-

Downloaded From: https://staging.bioone.org/journals/Acta-Chiropterologica on 23 Mar 2025
Terms of Use: https://staging.bioone.org/terms-of-use

joining (NJ) reconstruction was performed using PAUP* 4.0b10 software (Swofford, 2000). Robustness of the produced topology was assessed through bootstrapping (Felsenstein, 1985).

Results

A total of 27 *Plecotus* were caught during the survey; 15 were identified unambiguously as *P. auritus*, five as *P. austriacus* but seven showed intermediate morphology between the former two species (Table 1). These 'intermediate *Plecotus*' were captured on 19th July 2002 in two localities: an alpine meadows in 'Plana Narciso' (31TBH025472) at 2390 m (two lactating females), and a rocky bareground in 'Brecha de Rolando' (31TBH025473) at 2807 m (3 ♂♂ and 2 ♀♀, one lactating).

Morphological Analysis

The intermediate *Plecotus* captured in our survey were large-sized bats (Table 1). Dorsal fur coloration in the intermediate long-eared bats was brownish similar to *P. auritus*. Ventral fur colour was light creamy turning to yellowish near the neck and shoulders. All hairs were bicoloured with blackish proximal side. The facial mask was dark and the tragus was lancet-shaped and flesh-coloured, lacking any dark pigmentation on the distal half.

Molecular Analysis

A 545 bp fragment of the ND1 mitochondrial gene was amplified from 8 long-eared bats from the study area that were identified in the field as: one *P. auritus*, two *P. austriacus* and five 'intermediate *Plecotus*'. All unique haplotypes are deposited in the GenBank (Accession Numbers in Appendix). The fragments were aligned with the reference sequences obtained from the GenBank. According to LTR tests, we assumed in our analysis a HKY85 model with site heterogeneity (γ-shape parameter = 0.59) and Ts:Tv ratio = 13.145. Corrected sequence divergence among individuals

Table 1. Measurements (mm) of the long-eared bats of the genus *Plecotus* found in 'Ordesa y Monte Perdido' National Park (Pyrenees, Spain). FA: forearm length; CM^3: upper canine to 3rd molar length; TW: tragus width; ThL: thumb length excluding claw. Individuals used for DNA analysis are shown in bold

Species	Code No	Sex	FA	CM^3	TW	ThL
Plecotus sp.	**Psp804.IB**	♀	42.5	5.80	6.1	6.5
Plecotus sp.	**Psp805.IB**	♀	42.1	5.90	5.5	6.2
Plecotus sp.	**Psp806.IB**	♂	41.4	5.85	5.7	6.1
Plecotus sp.	Psp872.IB	♂	43.3	5.80	5.7	6.1
Plecotus sp.	**Psp873.IB**	♀	43.5	5.85	6.6	6.8
Plecotus sp.	**Psp874.IB**	♂	41.3	5.80	5.7	6.0
P. auritus	Paur803.IB	♂	38.9	5.25	5.35	6.6
P. auritus	**Paur870.IB**	♂	40.1	5.6	5.2	6.6
P. auritus	Paur871.IB	♂	39.4	5.6	5.2	6.6
P. auritus	Paur875.IB	♂	39.8	5.5	5.3	5.7
P. auritus	10.7/1	♀	41.1	–	5.4	6.1
P. auritus	10.7/2	♀	42.0	–	5.4	6.1
P. auritus	13.7/1	♂	40.3	–	5.0	6.1
P. austriacus	9.7/1	♀	39.9	–	5.9	5.4
P. austriacus	10.7/1b	♂	40.1	–	5.8	5.4
P. austriacus	10.7/2b	♂	39.6	–	6.3	5.1
P. austriacus	10.7/3b	♂	40.9	–	6.1	5.6
P. austriacus	**Paus876**	♀	39.9	–	5.9	5.4
P. austriacus	**Paus877**	♂	40.9	–	6.1	5.6

Downloaded From: https://staging.bioone.org/journals/Acta-Chiropterologica on 23 Mar 2025
Terms of Use: https://staging.bioone.org/terms-of-use

confirmed field identification of the individuals ascribed to *P. auritus* and *P. austriacus*. In fact, they showed small distances with respect to the reference sequences for these species (Table 2). The two haplotypes from the 'intermediate *Plecotus*' and the haplotype of *P. macrobullaris* from the Swiss Alps showed reduced (< 2%) corrected genetic distance among them (Table 2).

The NJ reconstruction showed three highly supported clades: two correspond clearly to *P. auritus* and *P. austriacus*, and a third clade that clustered with high bootstrap support to the haplotype of *P. macrobullaris* and included all the intermediate *Plecotus* samples (Fig. 1). The corrected genetic distances among these groups, ranged between 17.9 % (*P. macrobullaris* versus *P. auritus*) and 20.7 % (*P. auritus* versus *P. austriacus*).

Discussion

The intermediate *Plecotus* had a FA larger than any *P. auritus* or *P. austriacus* reported for the Iberian Peninsula (De Paz, 1994), and their measurements approached the values reported for *P. macrobullaris* (Tables 1 and 2). The intermediate bats had shorter ThL than *P. auritus*, but larger than *P. austriacus* and *P. kolombatovici* (Table 3), and approached the range reported for *P. sardus* (Mucedda *et al*., 2002). The intermediate *Plecotus* had wider TW than *P. auritus*, *P. sardus* or *P. kolombatovici* (Tables 1 and 2), and their C–M^3 fell within the ranges reported for *P. austriacus* and *P. macrobullaris* and were larger than for the other species (Table 3). Regarding the non-metric characters, the facial mask was darker in the intermediate *Plecotus* than in *P. auritus* but not as dark as in *P. austriacus*. The tragus was similar, both in shape and coloration to *P. auritus* (Stebbings, 1986; Schober and Grimmberger, 1989; De Paz and Benzal, 1990; Swift, 1998). Finally, none of the intermediate specimens examined showed the extremely whitish ventral coloration, nor the dark grey dorsal fur and facial mask described for *P. macrobullaris* in the Alps (Kiefer and Veith, 2002). This particular colour pattern was also shared by the individual found in Andorra (A. Kiefer, pers. com.).

In summary, the biometrics of the intermediate *Plecotus* largely concurred with the values given for *P. macrobullaris* (Kiefer and Veith, 2002; Spitzenberger *et al*., 2002, 2003). However, the colour pattern of the intermediate long-eared bats from the Pyrenees did not fit that described for *P. macrobullaris* from the Alps and resembled more closely that of *P. auritus*.

Table 2. Corrected genetic distances (HKY85 + G model; see Hasegawa *et al*., 1985) in a mitochondrial ND1 fragment among haplotypes of *Plecotus* from the Pyrenees and three homologous fragments of *P. auritus* (PaurAF401374.GE), *P. austriacus* (PausAF401367.GE) and *P. macrobullaris* (PmacAF519269.SW) obtained from the GenBank

Haplotypes	[1]	[2]	[3]	[4]	[5]	[6]	[7]	[8]
[1] PausAF401367.GE	–							
[2] PmacAF519269.SW	0.2004	–						
[3] Psp804.IB	0.2055	0.0018	–					
[4] Psp805.IB	0.2050	0.0018	0.0001	–				
[5] Paus876.IB	0.0111	0.1947	0.1997	0.1993	–			
[6] Paus877.IB	0.0111	0.2059	0.2110	0.2106	0.0074	–		
[7] PaurAF401374.GE	0.2214	0.1877	0.1896	0.1893	0.2154	0.2155	–	
[8] Paur870.IB	0.2004	0.1677	0.1696	0.1693	0.1948	0.1948	0.0485	–

Downloaded From: https://staging.bioone.org/journals/Acta-Chiropterologica on 23 Mar 2025
Terms of Use: https://staging.bioone.org/terms-of-use

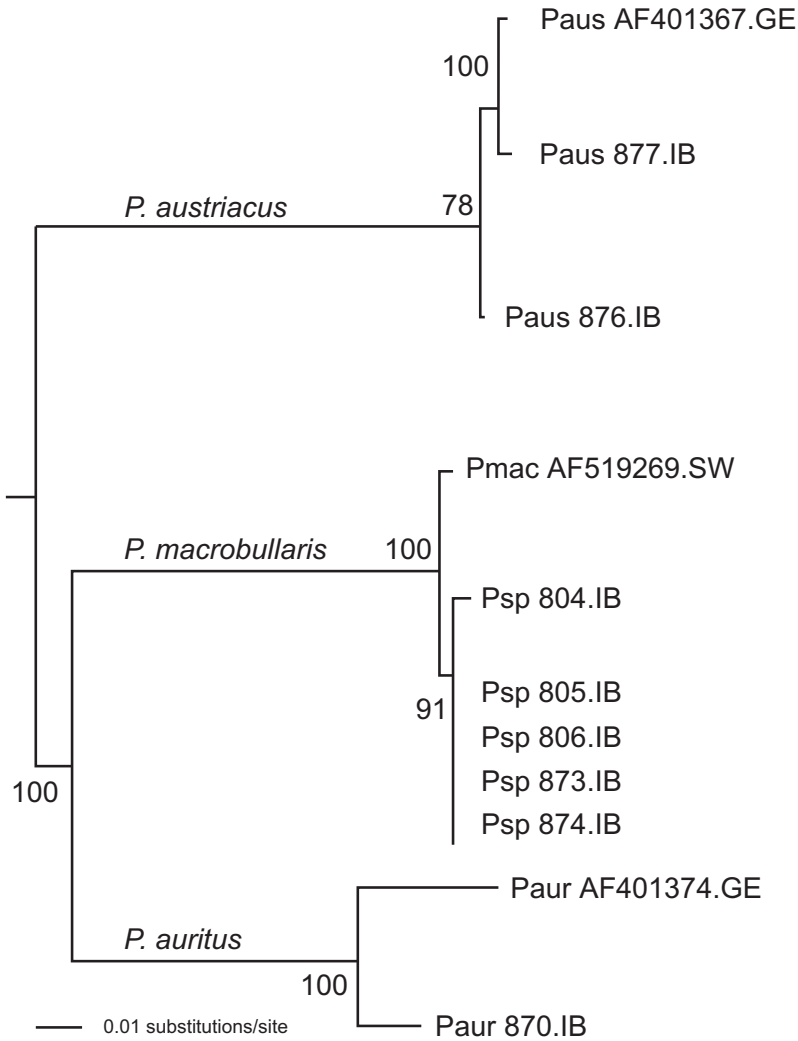

FIG. 1. Neighbor-joining tree (using a HKY85 model, see text) based on haplotypes of a 545 bp fragment of the mitochondrial ND1 gene of *Plecotus*. Sampling included specimens from the Pyrenees and three homologous fragments of *P. auritus* (PaurAF401374.GE), *P. austriacus* (PausAF401367.GE) and *P. macrobullaris* (PmacAF519269.SW) obtained from the GenBank. Bootstrap values are also shown. Species codes: Paur = *P. auritus*, Paus = *P. austriacus*, Pmac = *P. macrobullaris*, Psp = indeterminate *Plecotus*. Location codes: GE = Germany, IB = Iberia, SW = Switzerland

The phylogenetic reconstruction clearly confirms the presence of three lineages at specific level in the *Plecotus* of the Pyrenees. In fact, the corrected genetic distances among these groups are similar to the values reported among *P. auritus*, *P. austriacus* and *P. macrobullaris* in previous molecular analyses (Mayer and Helversen, 2001; Spitzenberger *et al*., 2001, 2003; Kiefer *et al*., 2002; Mucedda *et al*., 2002, Juste *et al*., In press) and are clearly above the species level divergence in bats.

The phylogenetic reconstruction confirms the classification of the *'intermediate Plecotus'* from the Pyrenees Mountains as *P. macrobullaris* (Fig. 1). The small corrected genetic distance between the intermediate *Plecotus* and the haplotype of

Downloaded From: https://staging.bioone.org/journals/Acta-Chiropterologica on 23 Mar 2025
Terms of Use: https://staging.bioone.org/terms-of-use

P. macrobullaris (= *P. alpinus*) from the Swiss Alps (Table 3) indicates a close evolutionary relationship among them, and discards any relationship between the intermediate *Plecotus* from the Pyrenees and the new *P. sardus*, since *P. macrobullaris* and *P. sardus* show genetic divergence well above species level (Mucedda *et al*., 2002). Nevertheless, the amount of corrected genetic distance between the haplotypes from the Pyrenees and the Alps (1–2%) indicates a relatively important period of isolation between both populations that would require an overall phylogeographic study of this new lineage to be fully understood.

In conclusion, both morphological and molecular analyses indicate the presence of *P. macrobullaris* in the Pyrenees, and extend the distribution of this new species westwards; whose western limit was previously considered to lie in the Alps (Spitzenberger *et al*., 2003). The biometrical comparison suggests that this westernmost population of *P. macrobullaris* is larger than any population known from the Alps (Table 2). This result challenges the suggestion of a clinal variation towards a reduction in size from East to West (Spitzenberger *et al*., 2003). Clearly, more detailed studies and larger samples size are needed in order to fully understand any pattern of variation within this newj species.

The two locations where the species was caught are at higher altitudes than both the 550–1200 m range reported for the species in the Alps (F. Spitzenberger, E. Haring and N. Tvrtković, in litt.) and the 1800 m reported in Greece (Kiefer and Veith, 2002). Accordingly, some large *Plecotus* specimens captured at 2000 m in Col de Bretolet (Aellen, 1961), and other high altitude populations in the Alps could also belong to *P. macrobullaris* as well, as Kiefer and Veith (2002) have suggested. The higher altitudes of *P. macrobullaris* in the Pyrenees than in the Alps would reflect a general distributional pattern shown by orophyllous faunal or floral species that are shared by both mountain ranges (Dendaletche, 1982). It is expected that *P. macrobullaris* will also be found at lower altitudes, mainly in the northern slopes of the Pyrenees, as

TABLE 3. Comparative measurements of the European species of *Plecotus* (measurements acronyms are described in Table 1). Sample sizes are shown in parentheses. Data sources: a) Häussler and Braun (1991); b) De Paz (1994); c) Kiefer and Veith (2002); d) Spitzenberger *et al*. (2002); e) Mucedda *et al*. (2002); f) authors' own data from the Basque Country (Western Pyrenees); g) Spitzenberger *et al*. (2003)

Species (and region)	FA	CM^3	TW	ThL	Source
P. auritus	37.5–39.7 (?)	5.3–5.5 (?)	4.5–5.5 (?)	–	a
	36.9–40.9 (?)	4.9–5.7 (?)	4.1–5.0 (?)	5.4–7.2 (?)	b
	35.1–43.2 (88)	5.10–5.61 (92)	–	–	d
	36.8–42.1 (85)		4.8–5.6 (41)	6,4–7,6 (41)	f
P. macrobullaris					
Western Alps	39.7–42.2 (5)	5.5–6.3 (5)	5.5–6.0 (5)	6.5–7.0 (5)	c
Eastern Alps	39.6–43.5 (18)	5.36–5.74 (18)	–	–	d
Caucasus	40.7–44.2 (11)	5.34–5.8 (4)	–	–	g
P. austriacus	38.4–42.0 (?)	5.8–6.3 (?)	5.7–6.3 (?)	–	a
	37.2–43.3 (?)	5.6–6.3 (?)	5.4–6.4 (?)	4.7–6.3 (?)	b
	33.9–42.1 (86)	5.40–6.29 (105)	–	–	d
	38.5–43.3 (26)	–	5.6–6.4 (19)	5.3–6.6 (19)	f
P. kolombatovici	36.2–39.3 (5)	5.16–5.42 (6)	–	–	d
	–	–	4.5–5.0 (?)	<6.5 (?)	e
P. sardus	40.9–42.3 (6)	5.75 (1)	6.0–6.5 (6)	6.0–6.4 (6)	e

Downloaded From: https://staging.bioone.org/journals/Acta-Chiropterologica on 23 Mar 2025
Terms of Use: https://staging.bioone.org/terms-of-use

suggested by the finding of a specimen in Andorra (Kiefer *et al*., 2003). Only the southern slopes of the Pyrenean range were sampled, where most species show a higher altitudinal range than in the northern slopes (Dendaletche, 1982).

Finally, these [and Kiefer *et al*.'s (2003)] findings imply the addition of a new species to the Iberian mammal fauna. However, further investigation is required to determine the presence of this species in other suitable areas of the Pyrenees, or even other mountain areas of Spain or France. The inter-population variation of diagnostic morphological characters (e.g., ventral colour) needs to be assessed to define reliable physical characters to be used for accurate identification in the field. This aspect is particularly important to permit the estimation of population levels and the evaluation of ecological requirements of *P. macrobullaris* to allow the design of effective conservation policies for this new species across its range.

Acknowledgements

We are grateful to J. Aihartza, J. Garrido, J. Nogueras, M. de Lucas and L. García, the Société Spéléologique of Agadir (Morocco), and R. Arlettaz of the University of Bern (Switzerland) for helping with the collection of samples. We thank I. Blanco, A. Casis, D. Basarte and R. García-González for field assistance. Carlos Ibáñez critically commented and improved first versions of the manuscript. This work was funded by the CSIC-OAPN agreement for the study of bats of the Ordesa y Monte Perdido National Park. Jane Orr gently corrected the English style. This research is supported by the projects REN2000-1639 and REN2002-01372 /GLO funded by the Dirección General de Investigación of the Spanish Ministry of Science and Technology.

Literature cited

Aellen, V. 1961. Le baguement des chauves-souris au Col de Bretolet (Valais). Archives des Sciences, Genève, 14: 365–392.

Arlettaz, R., A. Lugon, A. Sierro, and M. Desfayes. 1997. Les chauves-souris du Valais (Suisse): statut, zoogéographie et écologie. Le Rhinolophe, 12: 1–59.

Bauer, K. 1960. Die Säugetiere des Neusiedlersee-Gebietes (Österreich). Bonner Zoologische Beiträge, 11: 141–344.

Bree, P. J. H. V., and B. Đulić. 1963. Notes on some specimens of the genus *Plecotus* Geoffroy, 1818 (Mammalia, Chiroptera) from the Netherlands. Beaufortia, 10: 7–18.

Cabrera, A. 1914. Fauna Ibérica. Mamíferos Museo Nacional de Ciencias Naturales, Madrid, 441 pp.

Dendaletche, C. 1982. Guía de los Pirineos. Editorial Omega S.A., Barcelona, 790 pp.

De Paz, O. 1994. Systematic position of *Plecotus* (Geoffroy, 1818) from the Iberian Peninsula (Mammalia: Chiroptera). Mammalia, 58: 423–432.

De Paz, O., and J. Benzal. 1990. Clave para la identificación de los murciélagos de la Península Ibérica (Mammalia, Chiroptera). Miscellània Zoològica, 13: 153–176.

Felsenstein, J. 1985. Confidence limits on phylogenies: an approach using the bootstrap. Evolution, 39: 783–791.

Greenaway, F., and A. M. Hutson. 1990. A field guide to British bats. Bruce Coleman Books, Uxbridge, 52 pp.

Hasegawa, M., H. Kishino, and T. A. Yano. 1985. Dating of the human-ape splitting by a molecular clock of mitochondrial DNA. Journal of Molecular Evolution, 22: 160–174.

Higuchi, R., C. H. Von Beroldingen, G. F. Sensabaugh, and H. A. Erlich. 1988. DNA typing from hairs. Nature, 332: 543–546.

Juste, J., C. J. Ibáñez Muñoz, D. Trujillo, P. Benda, A. Karataş, and M. Ruedi. In press. Mitochondrial phylogeography of the long-eared bats (*Plecotus*) in the Mediterranean Palaearctic and Atlantic Islands. Molecular Phylogenetics and Evolution.

Kiefer, H., and M. Veith. 2002. A new species of long-eared bat from Europe (Chiroptera: Vespertilionidae). Myotis, 39: 5–16.

Kiefer, A., F. Mayer, J. Kosuch, O. Von Helversen, and M. Veith. 2002. Conflicting molecular phylogenies of European long-eared bats (*Plecotus*) can be explained by cryptic diversity. Molecular Phylogenetics and Evolution, 25: 557–566.

Kiefer, A., A. Seitz, and M. Veith. 2003. Neue Fledermausarten in Europa. Biologie in unserer Zeit, 33: 80–81.

Kowalski, K., and A. L. Ruprecht. 1981. Order: bats — Chiroptera. Pp. 101–154, *in* Keys to

Downloaded From: https://staging.bioone.org/journals/Acta-Chiropterologica on 23 Mar 2025
Terms of Use: https://staging.bioone.org/terms-of-use

vertebrates of Poland. Mammals (Z. Pucek, ed.). PWN – Polish Scientific Publishers, Warsaw, 367 pp.

Kumar, S., K. Tamura, I. B. Jakobsen, and M. Nei. 2001. MEGA2: Molecular evolutionary genetics analysis software. Arizona State University, Tempe.

Mayer, F., and O. von Helversen. 2001. Cryptic diversity in European bats. Proceedings of the Royal Society of London, Series B Biological Sciences, 268: 1825–1832.

Miller, G. S., Jr. 1912. Catalogue of the mammals of Western Europe (Europe exclusive of Russia) in the collection of the British Museum. British Museum Natural History, London, 480 pp.

Mucedda, M., A. Kiefer, E. Pidinchedda, and M. Veith. 2002. A new species of long-eared bat (Chiroptera, Vespertilionidae) from Sardinia (Italy). Acta Chiropterologica, 4: 121–136.

Posada, D., and K. A. Crandall. 1998. MODELTEST: testing the model of DNA substitution. Bioinformatics, 14: 817–818.

Schober, W., and E. Grimberger. 1989. Bats of Britain and Europe. Hamlyn Publishing Group, London, 224 pp.

Spitzenberger, F., J. Pialek, and E. Haring. 2001. Systematics of the genus *Plecotus* (Mammalia, Vespertilionidae) in Austria based on morphometric and molecular investigations. Folia Zoologica, 50: 161–172.

Spitzenberger, F., E. Haring, and N. Tvrtković. 2002. *Plecotus microdontus* (Mammalia, Vespertilionidae), a new bat species from Austria. Natura Croatica, 11: 1–18.

Spitzenberger, F., P. Strelkov, and E. Haring. 2003. Morphology and mitochondrial DNA sequences show that *Plecotus alpinus* Kiefer and Veith, 2002 and *Plecotus microdontus* Spitzenberger, 2002 are synonyms of *Plecotus macrobullaris* Kuzjakin, 1965. Natura Croatica, 12: 39–53.

Stebbings, R. E. 1986. Which bat is it? A guide to bat identification in Great Britain and Ireland. The Mammal Society, London, 49 pp.

Swift, S. M. 1998. Long-eared bats. Poyser Ltd., London, 182 pp.

Swofford, D. L. 2000. PAUP*. Phylogenetic analysis using parsimony (and other methods) Version 4.0b10. Sinauer Associates, Sunderland, Massachusetts.

Worthington Wilmer, J., and E. Barratt. 1996. A non-lethal method of tissue sampling for genetic studies of chiropterans. Bat Research News, 37: 1–3.

Received 11 July 2003, accepted 12 October 2003

Appendix

List of specimens of long-eared bats of the genus *Plecotus* used in the present study and accession numbers of the haplotypes

Species	Specimen ID	Locality	Geographic coordinates	Accession No.	Voucher
P. macrobullaris	Palp.SW	Duvin, Switzerland	?	AF519269	Biopsy
Plecotus sp.	Psp.804.IB	Ordesa, Huesca, Spain	42°40'N, 00°00'W	AY328903	Biopsy
Plecotus sp.	Psp.805.IB	Ordesa, Huesca, Spain	42°40'N, 00°00'W	AY328904	Biopsy
Plecotus sp.	Psp.806.IB	Ordesa, Huesca, Spain	42°40'N, 00°00'W	AY328904	Biopsy
Plecotus sp.	Psp.873.IB	Ordesa, Huesca, Spain	42°40'N, 00°00'W	AY328904	Biopsy
Plecotus sp.	Psp.874.IB	Ordesa, Huesca, Spain	42°40'N, 00°00'W	AY328904	Biopsy
P. auritus	Paur.GE	Bavaria, Germany	?	AF401374	Biopsy
P. auritus	Paur.870.IB	Ordesa, Huesca, Spain	42°40'N, 00°00'W	AY328906	Biopsy
P. austriacus	Paus.GE	Bavaria, Germany	?	AF401367	Biopsy
P. austriacus	Paus.876.IB	Anisclo, Huesca, Spain	?	AY328902	Biopsy
P. austriacus	Paus.877.IB	Escuain, Huesca, Spain	?	AY328905	Biopsy

Downloaded From: https://staging.bioone.org/journals/Acta-Chiropterologica on 23 Mar 2025
Terms of Use: https://staging.bioone.org/terms-of-use