In silico Identification of Novel Chitinase-Like Proteins in the Silkworm, Bombyx mori, Genome

Authors: Pan, Ye, Lü, Peng, Wang, Yong, Yin, Lijing, Ma, Hexiang, et al.

Source: Journal of Insect Science, 12(150) : 1-14

Published By: Entomological Society of America

URL: https://doi.org/10.1673/031.012.15001

The BioOne Digital Library (https://bioone.org/) provides worldwide distribution for more than 580 journals and eBooks from BioOne's community of over 150 nonprofit societies, research institutions, and university presses in the biological, ecological, and environmental sciences. The BioOne Digital Library encompasses

Downloaded From: https://staging.bioone.org/journals/Journal-of-Insect-Science on 25 Mar 2025
Terms of Use: https://staging.bioone.org/terms-of-use

Journal of Insect Science
www.insectscience.org

In silico identification of novel chitinase-like proteins in the silkworm, *Bombyx mori*, genome

Ye Pan,[1a#] Peng Lü,[2,3b#] Yong Wang,[3] Lijing Yin,[1] Hexiang Ma,[1] Guohong Ma,[1] Keping Chen,[2] Yuanqing He[1,3c*]

[1]The Laboratory Animal Research Center, Jiangsu University, No. 301 Xuefu Road, Zhenjiang 212013, P.R China.
[2]Institute of Life Sciences, Jiangsu University, 301 Xuefu Road, Zhenjiang 212013, P. R. China
[3]School of Food and Biological Engineering, Jiangsu University, 301 Xuefu Road, Zhenjiang 212013, P. R. China
[#]These authors contributed equally to this paper.

Abstract

In insects, chitinases participate in the periodic shedding of old exoskeletons and the turnover of peritrophic membranes. Chitinase family members have been identified in dozens of species, including *Tribolium castaneum*, *Drosophila melanogaster*, and *Anopheles gambiae*. In this study, nine chitinases and three hypothetical chitinases have been identified in *Bombyx mori* L. (Lepidoptera: Bombycidae) through genome-wide searching. Phylogenetic analyses revealed that seven of them belong to the seven chitinase groups, respectively. BmCht25 and BmCht26 could not be grouped into the known chitinase groups, and might belong to two new groups of the chitinase family. BmCht10, BmCht25, and BmIDGF have glutamate amino acid substitutions in the active catalytic domain. Only BmCht5 and BmCht10 contain CBD domain and PEST sequences (rich in proline, glutamic acid, serine, and threonine). *BmCht5* and *BmCht26* are located on chromosome 7, and others (BmCht6, BmCht7, BmCht10, BmCht11, BmCht20, BmIDGF) are located on separate chromosomes of *Bombyx mori*, respectively. The present study provides important background information for future studies using *Bombyx mori* as a model organism for insect development and virus and host interaction.

Abbreviations: Ag, *A. gambiae*; **Bm**, *B. mori*; **CBD**, chitin-binding domains; **Dm**, *D. melanogaster*; **IDGF**, imaginal disc growth factor; **Tc**, *T. castaneum*

Keywords: blast search, *Bombyx mori* chitinases, phylogenetic analysis

Correspondence: [a] panye@ujs.edu.cn, [b] lvpeng_zj@hotmail.com, [c] yqhe@ujs.edu.cn, * Corresponding author

Editor: Igor Sharakhov was editor of this paper.
Received: 29 March 2012 **Accepted:** 10 July 2012

Copyright : This is an open access paper. We use the Creative Commons Attribution 3.0 license that permits unrestricted use, provided that the paper is properly attributed.

ISSN: 1536-2442 | Vol. 12, Number 150

Cite this paper as:
Pan Y, Lü P, Wang Y, Yin L, Ma H, Ma G, Chen K, He Y. 2012. *In silico* identification of novel chitinase-like proteins in the silkworm, *Bombyx mori*, genome. *Journal of Insect Science* 12:150. Available online: http://www.insectscience.org/12.150

Downloaded From: https://staging.bioone.org/journals/Journal-of-Insect-Science on 25 Mar 2025
Terms of Use: https://staging.bioone.org/terms-of-use

Introduction

Chitin is an insoluble polysaccharide of N-acetylglucosamine, which is a special and important biological polymer of arthropods. It serves as a major structural component of the insect epidermis, trachea, and peritrophic membrane of the intestinal epithelial cuticle. Peritrophic matrix may protect the midgut from infection by pathogens and physical damage by food particles (Shen and Jacobs Lorena 1999). Insects' growth and metamorphosis are strictly dependent on the structural changes of tissues that contain chitin. Coordination of chitin synthesis and its degradation requires strict control of the participating enzymes during development.

Chitinase is an important enzyme responsible for chitin metabolism. Insect chitinases belong to glycoside hydrolase family 18, which has a highly conserved Glyco_18 catalytic domain. Its family members have been found in a wide range of organisms including bacteria, viruses, yeasts, fungi, plants, protozoan parasites, arthropods, and mammals. In humans, six Glyco_18 domain-containing proteins were identified, and the major sources of these proteins are macrophages, neutrophils, epithelial cells, chondrocytes, synovial cells, and cancer cells. Mammalian chitinases are associated with various human disorders and can be used as major and supplementary markers for numerous inflammatory and malignant disorders (Kzhyshkowska et al. 2007). Chitinases have also been identified in the genome of *Autographa californica* nucleopolyhedrovirus (AcNPV) and *Bombyx mori* nucleopolyhedrovirus (BmNPV), both of which belong to the family *Baculoviridae* and attack insects and other arthropods. The baculoviral chitinases may be essential for causing final host liquefaction at the late stage of infection (Merzendorfer H. 2003).

In insects, chitinases have a defensive role when bacteria and fungi penetrate the peritrophic membrane and play a crucial role in larval molting and pupation. *Anopheles gambiae* midgut chitinase seems to act in concert with a chitin synthase to modulate the thickness and permeability of the peritrophic membrane (Shen and Jacobs Lorena 1997). *Ostrinia nubilalis* midgut-specific chitinase plays an important role in regulating chitin content of the peritrophic membrane and subsequently affecting the growth and development of the larvae (Khajuria et al. 2010). Recently, a fat body-specific chitinase was detected in *Glossina morsitans* milk gland tissue and could be important for the development of intrauterine larvae (Merzendorfer H. 2003).

One of the structural features observed in many of these insect chitinases is a multi-domain architecture that includes a signal peptide, one or more Glyco_18 catalytic domains, chitin-binding domains (CBD), and a PEST sequence rich in proline, glutamic acid, serine, and threonine. The domestic silkworm, *Bombyx mori* L. (Lepidoptera: Bombycidae), is a central model system for Lepidoptera genomics and genetics, and is also an economically important insect. In this paper, nine *B. mori* chitinases, three hypothetical chitinases identified in the *B. mori* genome database, and an analysis of these sequences are reported.

Materials and Methods

tBLASTn searches

Tribolium castaneum and *Drosophila melanogaster* chitinases (Zhu et al. 2004; Zhang et al. 2011) were downloaded from GenBank (http://www.ncbi.nlm.nih.gov), and the sequences of Glyco_18 catalytic domain

Downloaded From: https://staging.bioone.org/journals/Journal-of-Insect-Science on 25 Mar 2025
Terms of Use: https://staging.bioone.org/terms-of-use

were used to search for similar genes in the silkworm genome sequence with tBLASTn search against database of *B. mori* genome draft sequences (http://www.ncbi.nlm.nih.gov/sutils/genom_table.cgi?organism=insects, and http://silkworm.genomics.org.cn/). The obtained sequences were predicted using FGENESH+ to find the potential chitinase sequences. Determination of the chromosome location of *B. mori* chitinases was carried out with SilkMap program (http://silkworm.swu.edu.cn/silksoft/silkmap.html).

Domain analysis of predicted *B. mori* chitinases

Pfam (http://pfam.wustl.edu/) and SMART (http://smart.embl-heidelberg.de/) domain analysis programs were used to predict the domain architecture of potential chitinases. PEST sequence was predicted by ePESTfind program (http://emboss.bioinformatics.nl/cgi-bin/emboss/epestfind).

Sequence alignment

Multiple sequence alignment was performed using the ClustalW program (http://www.ebi.ac.uk/clustalw/). Previous studies have shown four highly conserved signature sequences in the amino acid sequences of all known insect chitinases (Zhang et al. 2011): FDGXDLDWEYP (the residue E is a putative proton donor in the mechanism, and is important for catalytic activity), KXXXXXGGW, MXYDXXG, and GXXXWXXDXD. The sequences that had none of these four conserved sequences were discarded.

Phylogenetic analysis

Phylogenetic analyses to all the identified *B. mori* chitinase members were carried out in two steps. First, all obtained catalytic domain sequences of *B. mori* chitinases were used to build a neighbor-joining distance tree with the *D. melanogaster* and *T. castaneum* chitinases catalytic domain sequences using MAGA5.0 (Tamura et al. 2011). Then, each catalytic domain sequence of *B. mori* chitinases was used to conduct in-group phylogenetic analyses (Wang et al. 2007). The neighbor-joining trees were bootstrapped with 5,000 replicates to provide information about their statistical reliability.

Results and Discussion

The chitinase members in *B. mori*

The catalytic domain sequences of chitinases from *D. melanogaster* and *T. castaneum* were used to carry out a tBLASTn search against the *B. mori* genome database. The four conserved regions of catalytic domain amino acid sequences were included in all the reference chitinases used for tBLASTn searching.

There were nine *B. mori* chitinase proteins identified by tBLASTn searches and sequence analysis. They had four conserved regions of catalytic domain (Table 1). Because the following phylogenetic analyses (Figure 1 and Figure 2) provided support for allocating the identified *B. mori* chitinases into their corresponding families, these chitinases were named as Bm followed by the family name plus a number if more than one member was found in that family. However, two *B. mori* chitinases cannot form monophyletic groups with *T. castaneum*, *A. gambiae*, or *D. melanogaster* chitinase. These two genes were named as BmCht25 and BmCht26 in accordance with the nomenclature used by Zhang et al (2011). BmCht5 (GenBank accession No.: AAB47538), BmCht26 (GenBank accession No.: BAC67246), and

Downloaded From: https://staging.bioone.org/journals/Journal-of-Insect-Science on 25 Mar 2025
Terms of Use: https://staging.bioone.org/terms-of-use

Table 1. Accession number in NCBI database, amino acid residues, structural domains, pI and Mw values of the predicted *Bombyx mori* chitinases. NS: Not shown in prediction.

Accession no.	Gene name	Length aa	Signal peptide	Catalytic domain	CBD	PEST motif	pI	Mw
Ctg005283	BmCht5	565	1-20	24-376	487-548	417-440 471-499	5.15	63394.21
Ctg000302	BmCht6	308	NS	33-280	NS	NS	8.68	34732.12
BGIBMGA005539-TA	BmCht7	210	NS	72-210	NS	NS	9.63	23630.01
BGIBMGA006874-TA	BmCht10	2732	NS	12-354 500-842 1397-1741 1833-2178 2350-2691	389-444 986-1039 1045-1098 1107-1160 1207-1259 1286-1339 2280-2331	865-877 1374-1389 1768-1794	5.72	303400.6
BGIBMGA005859-TA	BmCht11	429	1-32	56-392	NS	NS	7.63	48787.78
BGIBMGA009695-TA	BmCht20	479	NS	4-351	NS	NS	6.35	54092.54
Ctg004145	BmIDGF	433	1-23	23-412	NS	NS	7.64	48144.25
BGIBMGA008900-TA	BmCht25	394	1-19	77-386	NS	NS	8.78	45175.99
Ctg006977	BmCht26	555	1-19	153-539	NS	NS	5.78	61272.13
BGIBMGA006989-TA	*B. mori* hypothetical chitinases protein 1	2128	NS	5-144	220-284 296-356 2060-2120	55-77	5.88	233538.1
Ctg004494	*B. mori* hypothetical chitinases protein 2	538	NS	1-252 371-735	786-844	781-794	6.14	96721.84
Ctg000302	*B. mori* hypothetical chitinases protein 3	561	NS	1-236	361-401	NS	6.96	63636.1

BmIDGF (Imaginal disc growth factor, GenBank accession No.: NP_001036847) were previously reported (Kim et al. 1998; Daimon et al. 2003; Wang et al. 2009). These three proteins were renamed based on the phylogenetic analysis of the catalytic domain. Three *B. mori* hypothetical chitinases protein were found to have incomplete catalytic domain, and these genes were named as *B. mori* hypothetical chitinase protein 1, 2, and 3, respectively.

Nakabachi et al. (2010) found 12 *B. mori* chitinases when they studied chitinase-like proteins encoded in the genome of *Acyrthosiphon pisum*. Ten of the sequences were the same as were found in the present study (BmCht5, BmCht6, BmCht7, BmCht10, BmCht11, BmCht20, BmIDGF, BmCht25, BmCht26, *B. mori* hypothetical chitinase protein 1), but the other two sequences they mentioned may not belong to glycoside hydrolase family 18, because they do not contain conserved sequences of Glyco_18 catalytic domain as shown by the analysis with SMART tool.

Identification of orthologous families

Identifying orthologous genes is accompanied with much uncertainty because there is no absolute criterion that can be used to decide if two genes are orthologous (Ledent and Vervoort 2001). In the present study, the criterion used was that a single *B. mori* chitinase must form a monophyletic group with another chitinase of a known family in phylogenetic trees constructed with different methods, and all the bootstrap values must exceed 50 (Zhu et al. 2004; Zhang et al. 2011).

The BmCht5, BmCht6, BmCht7, and BmCht11 formed monophyletic groups with *T. castaneum*, *A. gambiae*, and *D. melanogaster* catalytic domains, had bootstrap values greater than or equal to 50, and belong to Group I, Group VI, Group III, Group VIII, respectively (Figure 1). Bootstrap values of BmIDGF, BmCht10, BmCht20, BmCht25, and BmCht26 were not greater than or equal to 50. Further phylogenetic analyses showed that BmIDGF belongs to Group V (Figure

Downloaded From: https://staging.bioone.org/journals/Journal-of-Insect-Science on 25 Mar 2025
Terms of Use: https://staging.bioone.org/terms-of-use

2A), BmCht10 belongs to Group II (Figure 2B), and BmCht20 belongs to VII (Figure 2C). BmCht25 and BmCht26 were not included in any of the chitinase groups (Groups I–VIII) (Zhang et al. 2011). They may belong to two new groups of the chitinase family (Figure 2D and 2E). BmCht25 had 78% sequence identity with *Danaus plexippus* chitinase (GenBank accession No. EHJ68452) and 44% identity with *Culex quinquefasciatus* chitinase (GenBank accession No. XP_001869617). BmCht26 had 92% sequence identity with *Manduca sexta* chitinase (GenBank accession No. ABB88891) and 91% identity with *Samia Cynthia* chitinase (GenBank accession No. BAE16586).

Gene Structure and Chromosome Location of *B. mori Chitinases*

BmCht11 has only one exon and BmCht26 has two exons, whereas other *B. mori chitinase* genes have more than two exons (Figure 3). For example, has 9 exons and *BmCht5* has 10 exons (Figure 3). *B. mori* contains 27 autosomes and one Z chromosome. In this study, all identified *B. mori chitinases* genes on the silkworm chromosomes were mapped successfully. *BmCht5* and *BmCht26* are located on chromosome 7. Other *B. mori chitinases* (BmCht6, BmCht7, BmCht10, BmCht11, BmCht20, BmIDGF) are located on separate chromosomes, respectively (Figure 4).

Domain analysis of *B. mori* chitinases

A multi-domain structural organization is often observed in polysaccharide-degrading enzymes, where one or more domains are responsible for hydrolysis and associating with the solid polysaccharide substrate. Catalysis in family 18 chitinases depends on catalytic domains. CBD domains in the chitinases are presumably to anchor the enzyme tightly onto the substrate. The linker region apparently helps to stabilize the enzyme and protects protease-susceptible bonds in the catalytic domain from hydrolysis in the gut. The PEST sequence in the linker region serves as proteolytic signals. With such domains, insect chitinases may evolve from efficient degradation of the insoluble polysaccharide to soluble oligosaccharides during the molting process (Kramer 1997; Arakane et al. 2003).

Domain analysis of the nine *B. mori* chitinases showed that they contain at least one Glyco_18 catalytic domain (Figure 5). The Glyco_18 catalytic domain with FDGXDLDWEYP sequence is predicted to be active catalytically, and the glutamate amino acid (E) substitutions in these sequences are predicted to be non-enzymatic. Most likely, these proteins are lectins that will bind to chitin or other carbohydrates containing N-acetylglucosamine. They may be involved in cell-to-cell communication or in insect immunity. BmCht10 has five catalytic domains. The first catalytic domain has a glutamate-valine (E-V), the second catalytic domain has a glutamate-asparagine (E-N), the fifth catalytic domain has a glutamate-Glutamine (E-Q), and the other two catalytic domains retain glutamate residues. Both BmIDGF and BmCht25 contain one catalytic domain, which have glutamate-glutamine (E-Q) and glutamate- leucine (E-L), respectively (Figure 6).

The function of the CBD domain in chitinases is presumably to anchor the enzyme tightly onto its substrate, thereby facilitating the hydrolytic process. In insect chitinases, the CBD domain has six conserved cysteines that probably form three disulphide bridges (Suetake et al. 2000; Behr and Hoch 2005). BmCht10 contains seven CBD domains,

Downloaded From: https://staging.bioone.org/journals/Journal-of-Insect-Science on 25 Mar 2025
Terms of Use: https://staging.bioone.org/terms-of-use

BmCht5 contains one CBD domain, and the other seven *B. mori* chitinases (BmCht6, BmCht7, BmCht11, BmCht20, BmCht25, BmCht26, and BmIDGF) do not contain a CBD domain (Figure 7).

The N-terminal sequence of BmCht5, BmCht11, BmCht25, BmCht26, and BmIDGF contains a highly hydrophobic amino acid that is likely to function as a signal peptide (Figure 3), which means that these chitinases are secreted. Some chitinases contain the sequences rich in proline (P), glutamic acid (E), serine (S), and threonine (T), which qualifies it as a PEST sequence (Rechsteiner and Rogers 1996). The linker region of *Manduca sexta* and *T. castaneum* chitinases also contain potential PEST sequences. It serves as proteolytic signals, necessary and sufficient for ubiquitination (Roth and Davis 2000). BmCht10 contains five catalytic domains that are separated by three potential PEST. It is speculated that BmCht10 may be expressed as zymogens that are subsequently cleaved by proteolysis to reveal multiple active enzymes. BmCht5 also contains two potential PEST sequences. This composition may promote the chitinase precursor to be converted into active form, or suggest that the insect chitinases might be rapidly degraded proteins.

Function of some *B. mori* chitinases

BmIDGF shows high sequence similarity to chitinase and belongs to group V of the chitinase-like family (Zhu et al. 2008). IDGF is a soluble polypeptide growth factor that was first identified from the conditioned medium of *D. melanogaster* imaginal disc C1.8+ cells. It is also expressed in larval glands and fat body. It is secreted and transported to target tissues via the hemolymph (Kawamura et al. 1999). However, the *D. melanogaster* IDGF, *D. melanogaster* DS47, and *T. castaneum* IDGF were demonstrated to be devoid of chitinolytic activity, although they could act as carbohydrate-binding proteins and bind very tightly to an insoluble ligand-colloidal chitin. In *Mamestra brassicae*, recombinant *M. brassicae* IDGF could stimulate the growth of cells derived from the fat body and hemocytes without insulin (Zhang et al. 2006). Previous work (Wang et al. 2009; Pan et al. 2010) found that BmIDGF was expressed in all developmental stages of silkworm larvae and various larval tissues and was located in the extracellular space. It was predicted that BmIDGF is produced mainly by the fat body, secreted into the hemolymph, and then brought to other organs.

BmCht5 generates four mRNA products (GenBank accession No. NP_001166831, NP_001037480, NP_001166832, and NP_001166833) by alternative splicing. Furthermore, the four mRNA products showed chitinase activity when expressed in *Escherichia coli*, which demonstrates the role of the alternative splicing process in generating multiple isoforms of the silkworm's chitinases. The presence of this splicing mechanism in the *B. mori* chitinases also contributes to the interpretation of the variations reported in studies of the insect's cDNAs. All of the mRNA products are from a single gene and functionally active (Babiker et al. 2002). Mikitani et al. (2000) found a novel DNA type transposon in BmCht5 that shows similarity to the TC-like transposable element.

BmCht26 showed extensive homology with chitinase of bacteria and baculoviruses. BmCht26 showed 62% sequence identity with BmNPV ChiA and 72% with *Serratia marcescens* chiA. It was suggested that BmCht26 may be derived from a bacterial or baculovirus chitinase gene via horizontal gene transfer (Daimon et al. 2003, 2005, 2006).The

Downloaded From: https://staging.bioone.org/journals/Journal-of-Insect-Science on 25 Mar 2025
Terms of Use: https://staging.bioone.org/terms-of-use

insect chitinases have been found to be endochitinases. In a recent study, BmCht26 had exo-type substrate preference just as baculoviruses ChiA (Daimon and Katsuma 2007), which is different from other *B. mori* chitinases. BmCht26 localizes in the chitin-containing tissues during the molting stages, indicating that it plays a role in chitin degradation during molting.

Interestingly, *B. mori* hypothetical chitinase proteins 1, 2, *and* 3 were found to have an incomplete catalytic domain that had lost the FDGXDLDWEYP and KXXXXXGGW conserved regions, but all of them retained the CBD domain. They may be hypothetical chitinase proteins in the silkworm genome (Table 1). They cannot form monophyletic groups with *T. castaneum*, *A. gambiae*, or *D. melanogaster* chitinases (data not shown). Nevertheless, it was found that *T. castaneum*, *Danaus plexippus*, and *Pediculus humanus corporis* also have a number of hypothetical chitinase sequences (GenBank accession No. EFA05323, EHJ77971 and XP_002425481), all of which have high sequence identity with the three *B. mori* hypothetical chitinase proteins. Whether they are genuine chitinase proteins and have chitinase-like functions remains to be determined by further studies.

In *D. melanogaster*, sixteen chitinases were identified. In *T. castaneum*, twenty-two chitinases were identified. In *A. gambiae*, twenty chitinases were identified (Zhang et al. 2011). In this work, nine *B. mori* chitinases and three hypothetical chitinase proteins were identified in the current version of silkworm genome sequences. Therefore, identification of more *B. mori* chitinases is expected upon release of a new version of the silkworm genome. Protein expression and chitinase activity assays, as well as chitin-binding studies, are needed to verify that the sequences identified in this study are indeed *B. mori* chitinase proteins.

References

Arakane Y, Zhu Q, Matsumiya M, Muthukrishnan S, Kramer KJ. 2003. Properties of catalytic, linker and chitin-binding domains of insect chitinase. *Insect Biochemistry and Molecular Biology* 33: 631-48.

Babiker MA, Banat A, Koga D. 2002. Alternative Splicing of the Primary Transcript Generates Heterogeneity within the Products of the Gene for *Bombyx mori* Chitinase. *The Journal of Biological Chemistry* 277: 30524-30534.

Behr M, Hoch M. 2005. Identification of the novel evolutionary conserved obstructor multigene family in invertebrates. *FEBS letters* 579: 6827-33.

Daimon T, Hamada K, Mita K, Okano K, Suzuki MG, Kobayashi M, Shimada T. 2003. A *Bombyx mori* gene, BmChi-h, encodes a protein homologous to bacterial and baculovirus chitinases. *Insect Biochemistry and Molecular Biology* 33: 749-759.

Daimon T, Katsuma S. 2007. Mutational analysis of active site residues of chitinase from *Bombyx mori* nucleopolyhedrovirus. *Virus Research* 124:168-175.

Daimon T, Katsuma S, Iwanaga M, KangWK, Shimad T. 2005. The BmChi-h gene, a bacterial-type chitinase gene of *Bombyx mori*, encodes a functional exochitinase that plays a role in the chitin degradation during the molting process. *Insect Biochemistry and Molecular Biology* 35: 1112-1123.

Downloaded From: https://staging.bioone.org/journals/Journal-of-Insect-Science on 25 Mar 2025
Terms of Use: https://staging.bioone.org/terms-of-use

Daimon T, Katsuma S, Kang W, Shimada T. 2006. Comparative studies of *Bombyx mori* nucleopolyhedrovirus chitinase and its host ortholog, BmChi-h. *Biochemical and Biophysical Research Communications* 345: 825-833.

Kzhyshkowska J, Gratchev A, Goerdt S. 2007. Human Chitinases and Chitinase-Like Proteins as Indicators for Inflammation and Cancer. *Biomarker Insights* 2:128-146.

Kramer KJ, Muthukrishnan S. 1997. Insect Chitinases: Molecular Biology and Potential Use as Biopesticides. *Insect Biochemistry and Molecular Biology* 27:887-900.

Kawamura K, Shibata T, Saget O, Peel D , Bryant PJ. 1999. A new family of growth factors produced by the fat body and active on *Drosophila* imaginal disc cells. *Development*. 126: 211-219.

Khajuria C, Buschman LL, Chen MS, Muthukrishnan S, Zhu KY. 2010. A gut-specific chitinase gene essential for regulation of chitin content of peritrophic matrix and growth of *Ostrinia nubilalis* larvae. *Insect Biochemistry and Molecular Biology* 40: 621-629.

Kim MG, Shin SW, Bae KS, Kim SC, Park HY. 1998. Molecular cloning of chitinase cDNAs from the silkworm, *Bombyx mori* and the fall webworm, *Hyphantria cunea*. *Insect Biochemistry and Molecular Biology* 28: 163-171.

Tamura K, Peterson D, Peterson N, Stecher G, Nei M, Kumar S. 2011. MEGA5: Molecular Evolutionary Genetics Analysis Using Maximum Likelihood, Evolutionary Distance, and Maximum Parsimony Methods. *Molecular Biology and Evolution* 28: 2731-2739

Ledent V, Vervoort M. 2001. The basic helix-loop-helix protein family: comparative genomics and phylogenetic analysis. *Genome Reseach* 11: 754-770.

Merzendorfer H, Zimoch L. 2003. Chitin metabolism in insects: structure, function and regulation of chitin synthases and chitinases. *The Journal of Experimental Biology* 206: 4393-4412.

Mikitani K, Sugasaki T, Shimada T, Kobayashi M, Gustafsson JA. 2000. The chitinase gene of the silkworm, *Bombyx mori*, contains a novel Tc-like transposable element. *The Journal of Biological Chemistry* 275: 37725-37732.

Nakabachi A, Shigenobu S, Miyagishima S. 2010. Chitinase-like proteins encoded in the genome of the pea aphid, *Acyrthosiphon pisum*. *Insect Biochemistry and Molecular Biology* (supplement) 19(2): 175-85.

Pan Y, Chen K, Xia H, Yao Q, Gao L, Lu P. 2010. Molecular cloning, expression and characterization of BmIDGF gene from Bombyx mori. *Zeitschrift fur Naturforschung* 65: 277-283.

Rechsteiner M, Rogers SW. 1996. PEST sequences and regulation by proteolysis. *Trends in Biochemical Sciences* 21: 267-271.

Roth AF, Davis NG. 2000. Ubiquitination of the PEST-like endocytosis signal of the yeast a-factor receptor. *The Journal of Biological Chemistry* 275: 8143-53.

Shen Z, Jacobs Lorena M. 1997. Characterization of a novel gutspecific

Downloaded From: https://staging.bioone.org/journals/Journal-of-Insect-Science on 25 Mar 2025
Terms of Use: https://staging.bioone.org/terms-of-use

chitinase gene from the human malaria vector *Anopheles gambiae*. *The Journal of Biological Chemistry* 272: 28895-28900.

Shen Z, Jacobs Lorena M. 1999. Evolution of chitin-binding proteins in invertebrates. *Journal of Molecular Evolution* 48: 341-347.

Suetake T, Tsuda S, Kawabata S, Miura K, Iwanaga S, Hikichi K, Nitta K, Kawano K. 2000. Chitin-binding proteins in invertebrates and plants comprise a common chitinbinding structural motif. *The Journal of Biological Chemistry* 275: 17929-17932.

Wang HB, Sakudoh T, Kawasaki H, Iwanaga M, Araki K, Fujimoto H, Takada N, Iwano H, Tsuchida K. 2009. Purification and expression analysis of imaginal disc growth factor in the silkworm, *Bombyx mori*. *Journal of Insect Physiology* 55: 1065-1071.

Wang Y, Chen K, Yao Q, Wang W, Zhi Z. 2007. The basic helix-loop-helix transcription factor family in *Bombyx mori*. *Development Genes and Evolution* 217: 715-723.

Zhang J, Sachio I, Tsugehara T, Takeda M. 2006. MbIDGF, a novel member of the imaginal disc growth factor family in *Mamestra brassicae*, stimulates cell proliferation in two lepidopteran cell lines without insulin. *Insect Biochemistry and Molecular Biology* 36: 536-546.

Zhang J, Zhang X, Arakane Y, Muthukrishnan S, Kramer KJ, Ma E, Zhu KY. 2011. Comparative genomic analysis of chitinase and chitinase-like genes in the African malaria mosquito (*Anopheles gambiae*). *PLoS One* 6: e19899.

Zhu Q, Arakane Y, Banerjee D, Beeman RW, Kramer KJ, Muthukrishnan S. 2008. Domain organization and phylogenetic analysis of the chitinase-like family of proteins in three species of insects. *Insect Biochemistry and Molecular Biology* 38: 452-466.

Zhu Q, Deng Y, Vanka P, Brown SJ, Muthukrishnan S, Kramer KJ. 2004. Computational identification of novel chitinase-like proteins in the *Drosophila melanogaster* genome. *Bioinformatics*. 20: 161-169.

Downloaded From: https://staging.bioone.org/journals/Journal-of-Insect-Science on 25 Mar 2025
Terms of Use: https://staging.bioone.org/terms-of-use

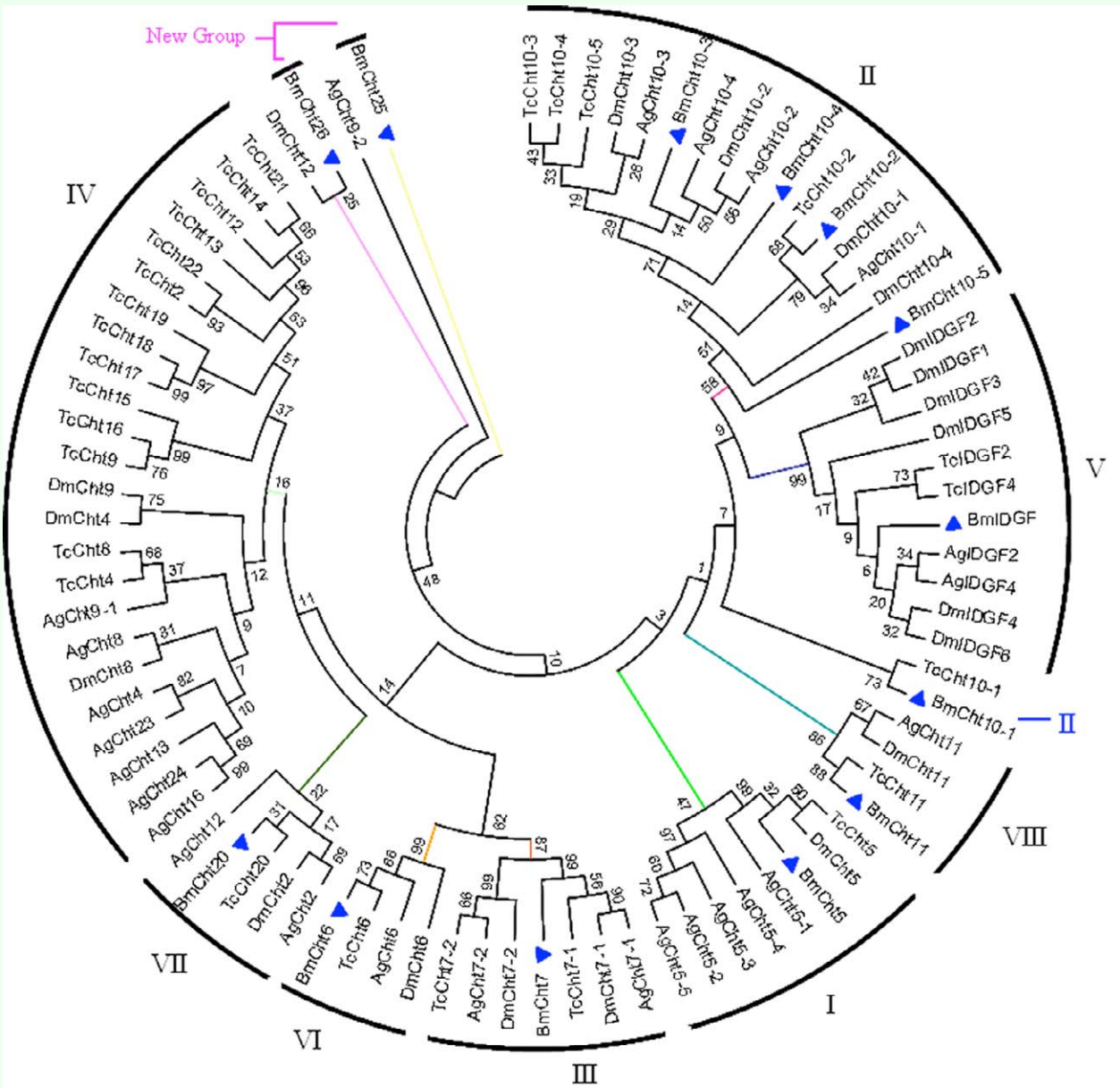

Figure 1. Phylogenetic analysis of *Bombyx mori* and other insect chitinase proteins. A phylogenetic tree was constructed by the neighbor-joining method based on catalytic domain sequences. Sequences used for the analysis are: NP_477298.2 (DmCht2), NP_524962.2 (DmCht4), NP_572598.1 (DmCht6), NP_647768.2 (DmCht7), NP_611542.1 (DmCht8), NP_611543.3 (DmCht9), EAA46011.1 (DmCht10), NP_572361.1 (DmCht11), NP_726022.1 (DmCht12), NP_477258.1 (DmIDGF1), NP_477257.2 (DmIDGF2), NP_723967.1 (DmIDGF3), NP_727374.1 (DmIDGF4), NP_611321.3 (DmIDGF5), NP_477081.1 (DmIDGF6), NP_001034516.3 (TcCht2), NP_001073567.1 (TcCht4), NP_001034524.1 (TcCht5), XP_967813.1 (TcCht6), NP_001036035.1 (TcCht7), NP_001038094.1 (TcCht8), NP_001038096.1 (TcCht9), NP_001036067.1 (TcCht10), XP_974461.1 (TcCht11), XP_972802.2 (TcCht12), NP_001036034.1 (TcCht13), XP_973005.1 (TcCht14), XP_973077.1 (TcCht15), NP_001034515.1 (TcCht16), XP_972719.1 (TcCht17), XP_973161.2 (TcCht18), XP_973119.2 (TcCht19), XP_970191.2 (TcCht20), NP_001034517.1 (TcCht21), NP_001038095.1 (TcCht22), NP_001038092.1 (TcIDGF2), NP_001038091.1 (TcIDGF4), XP_315650.4 (AgCht2), XP_315351.4 (AgCht4), HQ456129 (AgCht5-1), HQ456130 (AgCht5-2), HQ456131(AgCht5-3), HQ456132 (AgCht5-4), HQ456133 (AgCht5-5), XP_001687765.2 (AgCht6), XP_308858.4 (AgCht7), XP_316448.2 (AgCht8), XP_307732.4 (AgCht9), XP_001238192.2 (AgCht10), XP_310662.4 (AgCht11), XP_316142.4 9 (AgCht12), XP_314312.4 (AgCht13), XP_319801.4 (AgCht16), XP_001688641.1 (AgCht23), XP_316256.4 (AgCht24), XP_001237925.1 (Ag IDGF2), XP_317398.3 (Ag IDGF4). High quality figures are available online.

Downloaded From: https://staging.bioone.org/journals/Journal-of-Insect-Science on 25 Mar 2025
Terms of Use: https://staging.bioone.org/terms-of-use

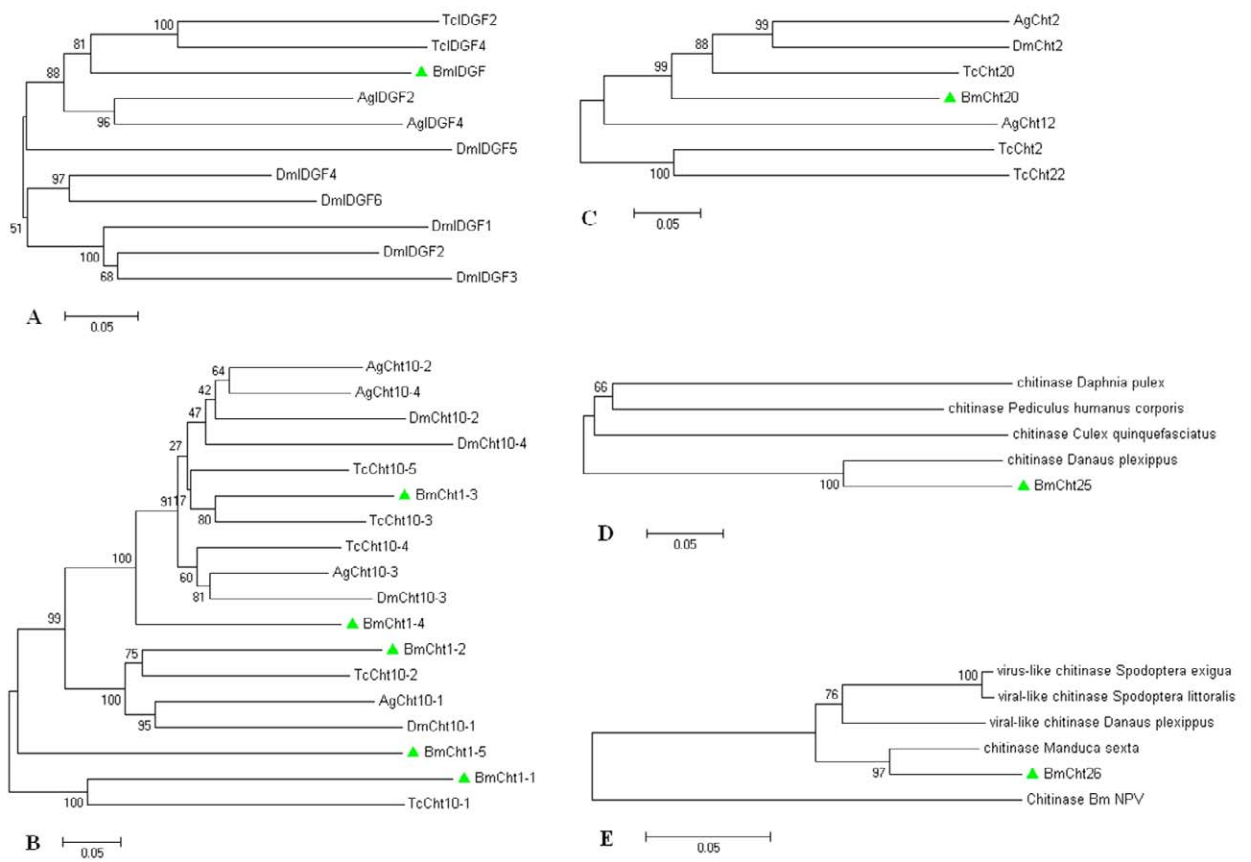

Figure 2. In-group phylogenetic analyses of BmIDGF (A), BmCht10 (B), BmCht20 (C), BmCht25 (D), BmCht26 (E). Neighbor-joining trees were constructed with selected group members of the catalytic domains. Sequences used for the analysis are: (A-C) Protein accession numbers are shown in Figure 1. (D) *Culex quinquefasciatus* chitinase XP_001869617.1, *Danaus plexippus* chitinase EHJ68452.1, *Daphnia pulex* chitinase EFX69014.1, *Pediculus humanus corporis* chitinase XP_002428336.1. (E) *Bm*NPV chitinase NP_047523.1, *Manduca sexta* chitinase-h ABB88891.1, *Danaus plexippus* viral-like chitinase EHJ71822.1, *Spodoptera littoralis* viral-like chitinase ABA06505.1, *Spodoptera exigua* virus-like chitinase ADI24347.1. High quality figures are available online.

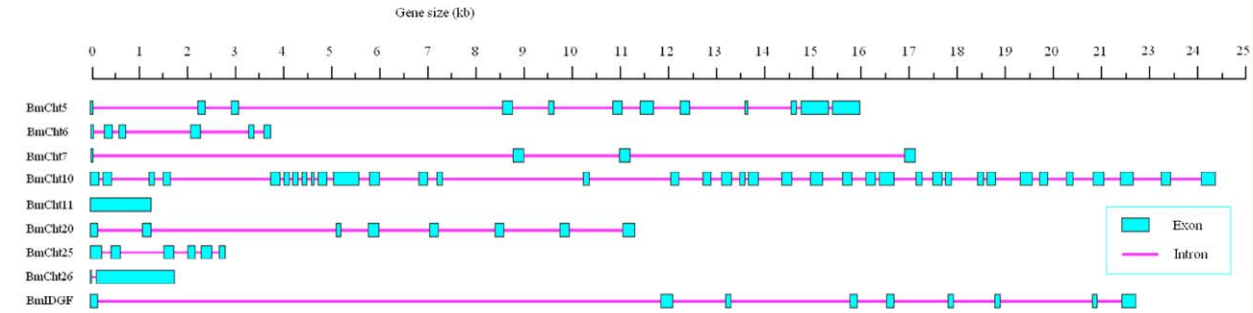

Figure 3. Schematic diagram of exon and intron organization of the chitinase genes from *Bombyx mori*. High quality figures are available online.

Downloaded From: https://staging.bioone.org/journals/Journal-of-Insect-Science on 25 Mar 2025
Terms of Use: https://staging.bioone.org/terms-of-use

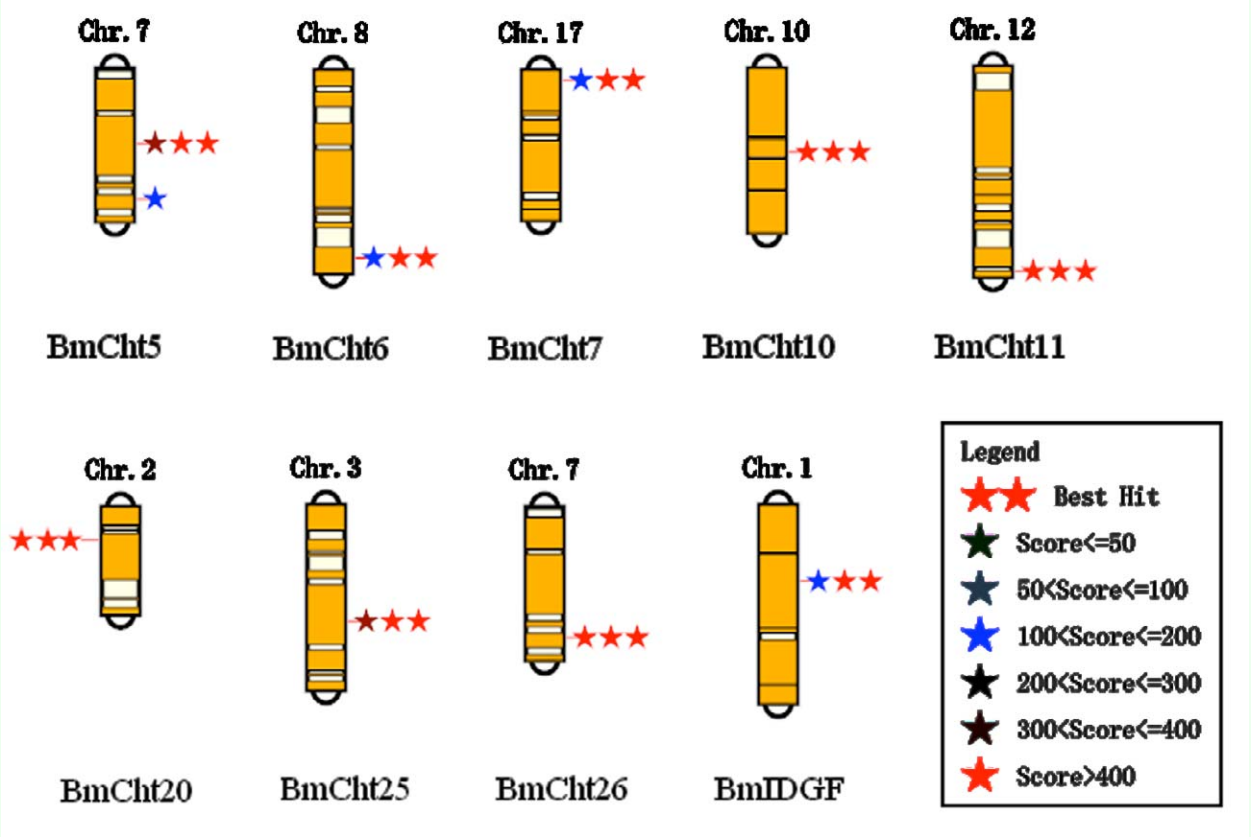

Figure 4. Chromosomal locations of *Bombyx mori* chitinase genes. High quality figures are available online.

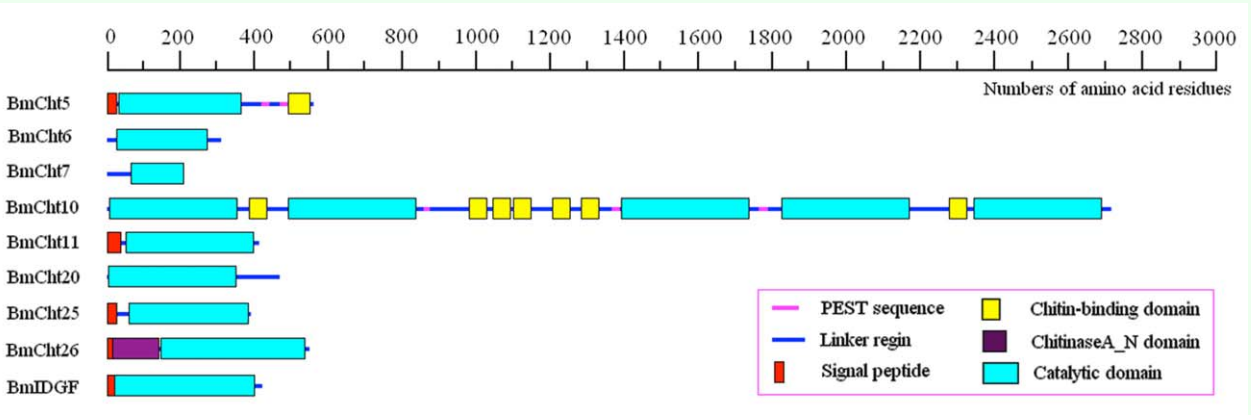

Figure 5. Domain architecture of identified *Bombyx mori* chitinase proteins. All the sequences contain at least one catalytic domain. The programs Pfam and SMART were used to analyze the identified sequences. High quality figures are available online.

Downloaded From: https://staging.bioone.org/journals/Journal-of-Insect-Science on 25 Mar 2025
Terms of Use: https://staging.bioone.org/terms-of-use

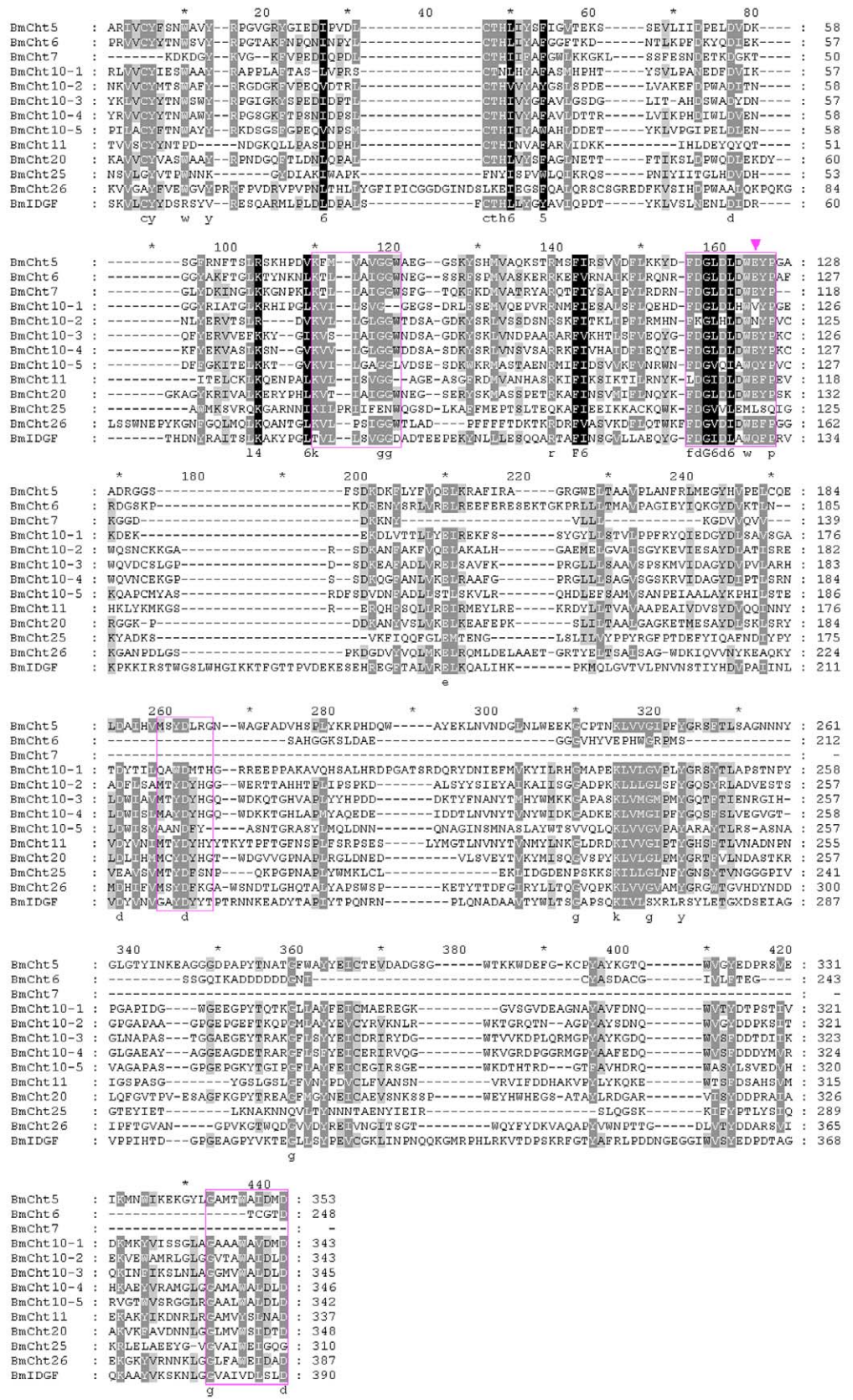

Figure 6. Multiple sequence alignment of the catalytic domains of *Bombyx mori* chitinase proteins. Catalytic domain sequences were retrieved from the identified *B. mori* chitinase proteins and the ClustalW program was used. The four conserved regions are boxed. The arrowhead indicates the important glutamate amino acid. High quality figures are available online.

Downloaded From: https://staging.bioone.org/journals/Journal-of-Insect-Science on 25 Mar 2025
Terms of Use: https://staging.bioone.org/terms-of-use

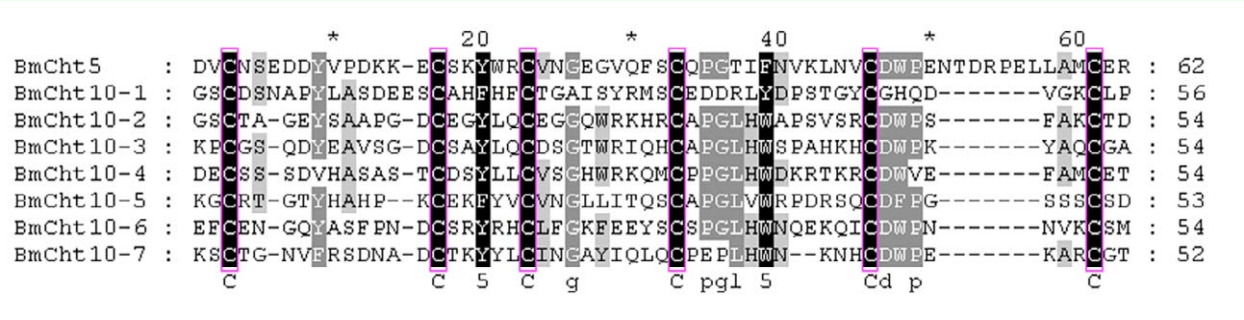

Figure 7. Multiple sequence alignment of CBD domains of *Bombyx mori* chitinase proteins. CBD domain sequences were retrieved from the identified *B. mori* chitinases and analyzed using the ClustalW program. The six cysteine residues are conserved among the chitin-binding domains of *B. mori* chitinases. High quality figures are available online.

Downloaded From: https://staging.bioone.org/journals/Journal-of-Insect-Science on 25 Mar 2025
Terms of Use: https://staging.bioone.org/terms-of-use